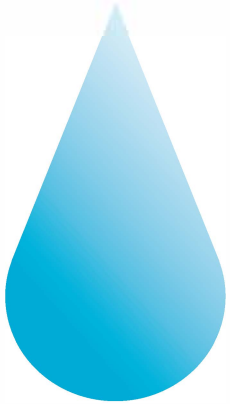

WT-600

INSTRUCTIONS FOR USE

AqueenaEvo

zepter® INTERNATIONAL

LIVE BETTER • LIVE LONGER

Thank you for choosing Zepter AqueenaEvo

Thank you for choosing the Zepter **AqueenaEvo** water purifying system. We appreciate your trust in Zepter International, a global leader in health and lifestyle solutions.

Your **AqueenaEvo** is designed to consistently deliver clean, healthy, and delicious water for you and your family, providing a reliable source of pure water in your home.

This guide will help you maximize the benefits of your **AqueenaEvo**. Please review these instructions carefully to understand its operation and maintenance procedures.

To ensure that your warranty remains valid, adhere to all guidelines outlined in this manual. For additional information or assistance, please contact your Zepter sales representative.

For **AqueenaEvo** installation, maintenance, or filter replacement services, please contact your authorized Zepter Service Technician or Zepter Service Center.

All contact details are conveniently found on your Warranty Card.

Index

1.	**AqueenaEvo technology**	pp. 4
2.	**AqueenaEvo Operating Parameters**	pp. 5
3.	**AqueenaEvo Overview**	pp. 6
4.	**Contents of the box**	pp. 7
5.	**Safety Information**	pp. 8
6.	**Installation Guide**	pp. 10
7.	**Getting started**	pp. 11
8.	**Installation Guide**	pp. 12
	Step 1 - Install the feed water adaptor valve	pp. 12
	Step 2 - Installing the Faucet	pp. 14
	Step 3 - Installing the Drain Saddle	pp. 15
	Step 4 - Assemble the Components	pp. 16
	Step 4.1 - How to release the tube (or plug) from a quick-connect	pp. 16
	Step 4.2 - How to insert the tube into a quick-connect	pp. 17
	Step 5 - Connect tubing	pp. 17
	Step 6 - System Flushing (Startup and Filter Replacement)	pp. 19
9.	**Maintenance and filter replacement**	pp. 20
10.	**All help Topics**	pp. 23
11.	**Disposal Information**	pp. 25
12.	**Warranty card and Statement**	pp. 26

1. AqueenaEvo technology

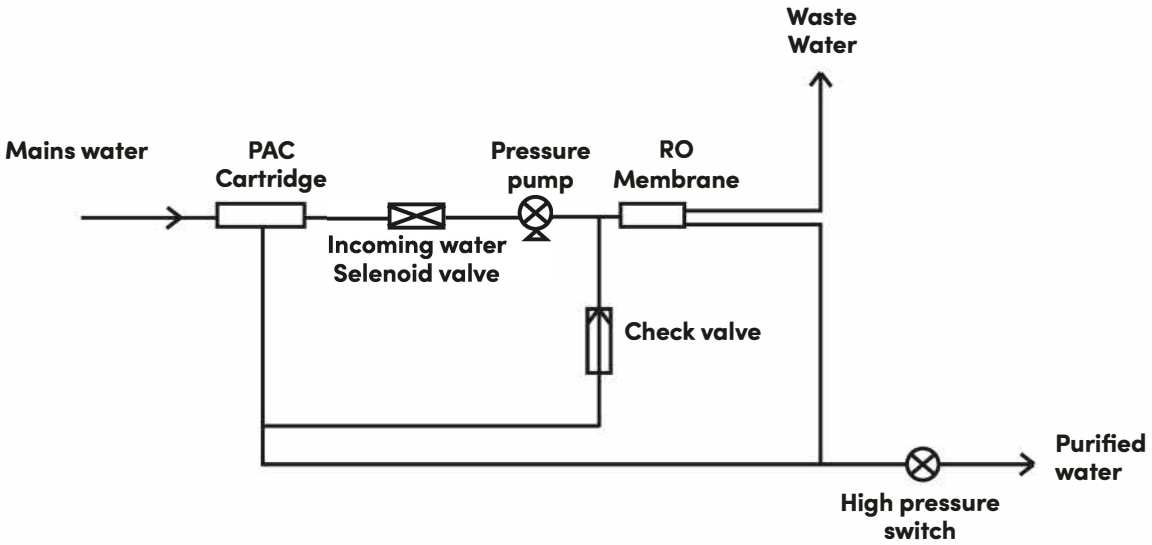

AqueenaEvo WT-600 is a superior 7-stage advanced filtration with under sink tankless **RO *(Reverse Osmosis)*** system. **PAC *(Polypropylene Activated Carbon Filter)*** removes 99% of large particles, residual chlorine, colour, and odors, while the RO (Reverse Osmosis) filter eliminates many harmful chemicals (PFAS, pharmaceuticals), heavy metals (lead, arsenic, uranium), TDS* (nitrates, nitrites), chloride, fluoride, microplastics, and many other toxic chemicals, including ethylene glycol, vinyl chloride, and acrylic acid, along with bacteria, viruses, and odors.

2. AqueenaEvo Operating Parameters

Model	AqueenaEvo WT-600
Maximum Flow Rate	2270 liters per day. Dependent on feedwater type, operating pressure and water temperature.
Rated Voltage	DC 24V
Feed Water Type	Municipal Potable/Tap water or Well water meeting the government drinking water standards.
Feed Water Pressure	15-60 PSI Note: Install a pressure regulator if the feed water pressure exceeds this.
Feed Water Temperature	5-38°C (41-100°F)
Ambient Temperature	4-40°C(40-104°F)
Feedwater TDS* level	≤1000 ppm
Water Hardness *(Optional)*	To achieve the best results, utilise feedwater that has a hardness level under 10 grains per gallon and is free of iron.

3. AqueenaEvo Overview

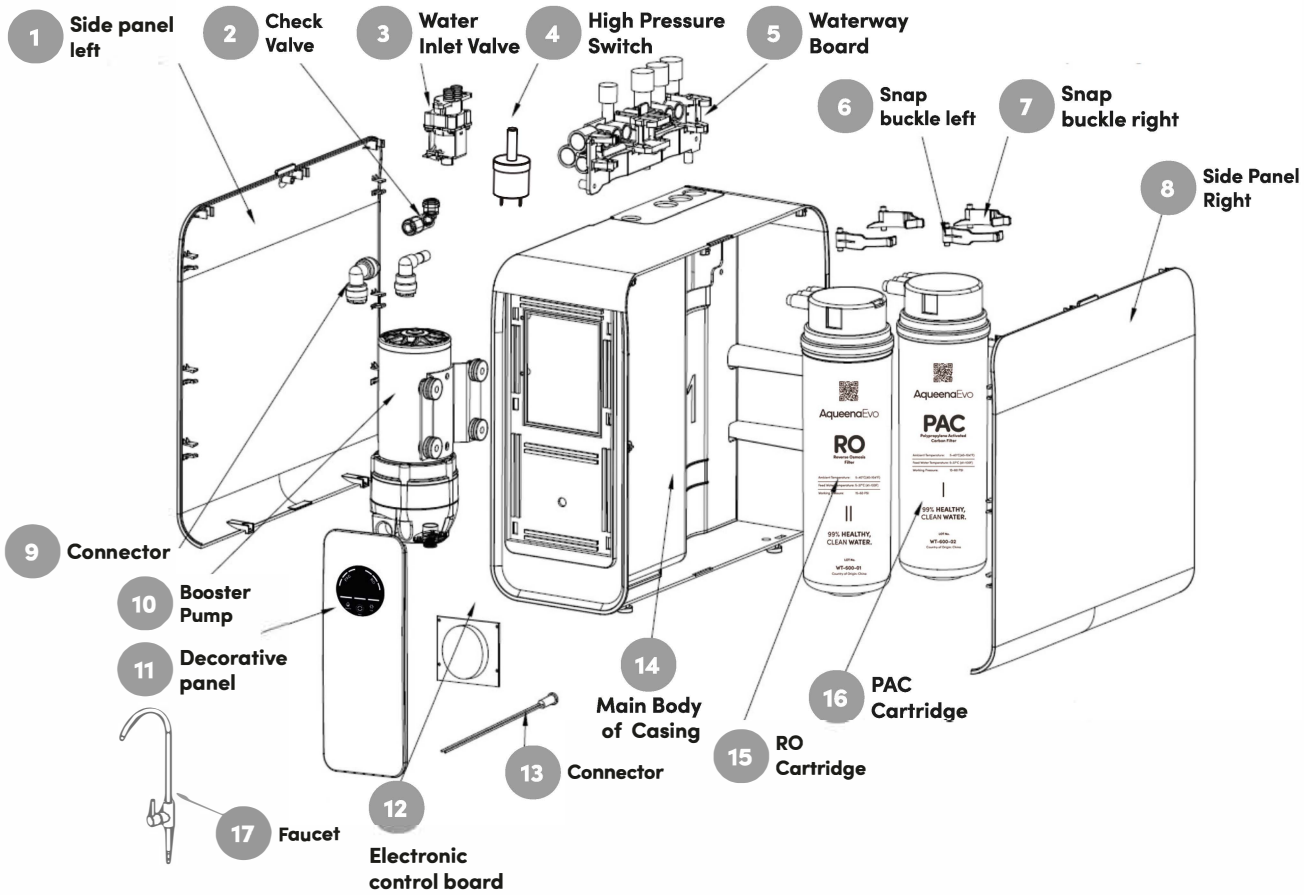

4. Contents of the box

Before starting the installation, carefully unpack your AqueenaEvo WT-600 device. Lay out all included parts to familiarize yourself with the components and verify that nothing is missing. Checking all parts in advance will help ensure a smooth and efficient installation process. Package Contents List:

A	Main body
B	Faucet
C	Power adapter AC/DC Input: 200-240V 50-60Hz 2.5A MAX
D	Drain saddle 1/4" quick fitting
E	Tubing 3/8"PE (White, 59 inches)
F	Tubing 3/8"PE (Blue, 59 inches)
G	Tubing 1/4"PE (Red, 59 inches)
H	Feedwater valve G3/8"x 3/8" tube (feedwater adaptor)
M	Spare parts kit
M1	G3/8"x 1/2" female convertor fitting
M2	G3/8"x 1/2" male convertor fitting
M3	3/8"Card pin (x3)
M4	1/4"Card pin (x3)
M5	Faucet adapter 3/8" x 1/4"tube QC
M6	Teflon tape (roll)
M7	O-rings for filter cartridges(x6)

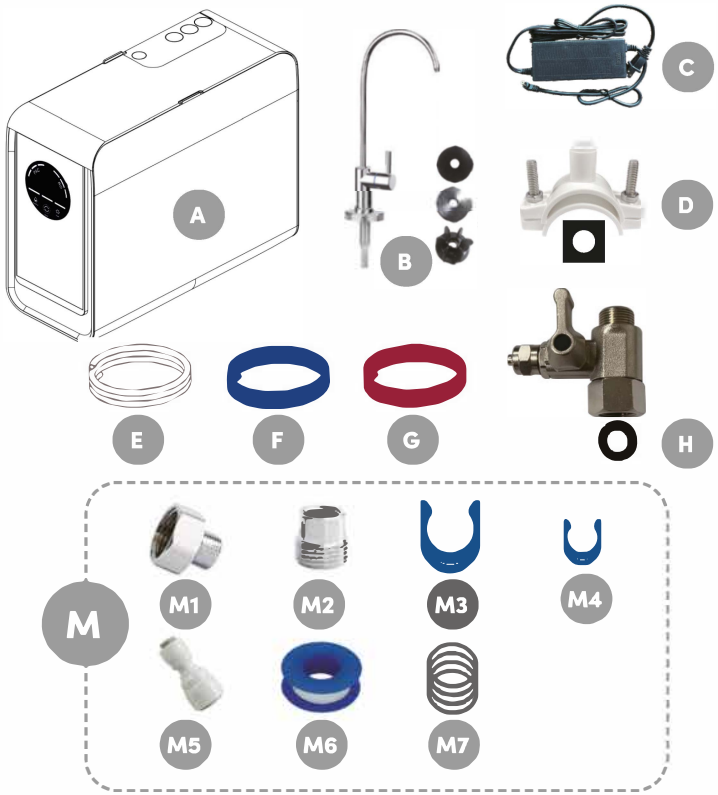

5. Safety Information

AqueenaEvo WT-600 **has been designed with safety in mind;** however, anyone handling or installing the system should be aware of potential risks. Before installation and operation, please **carefully review** all safety guidelines outlined in this manual.

Child Safety:
This product is **not a toy.** Keep children away from the system or ensure **adult supervision.** Packaging materials should also be kept out of children's reach.

The manual employs specifications to highlight certain details.
Warning! If not observed, serious physical injury or property damage may occur as a result

CAUTION! For safety reasons, be careful!
If not observed, minor physical injury or property damage may occur as a result.

NOTE! It contains additional information and helpful advice for the appropriate use of the water filter unit.

CAUTION!

- This user`s manual is an integral part of the appliance. Read carefully all the instructions and safety notices contained in the present manuals, which give important information on the device's use and maintenance. Keep the manual for future reference.
- After removing the packaging, make sure that the water filtration unit is intact, carefully inspect the device body and the accessories pack.
- This appliance can only be assigned to the function it has been designed for. The manufacturer cannot be held responsible for any damage arising from improper, incorrect, or unreasonable use.
- This appliance is not intended for use by persons (including children) with reduced physical, sensory, or mental capabilities, or a lack of experience and knowledge, unless they have been given supervision or instruction regarding the use of the appliance by a person responsible for their safety.
- Children should be supervised to ensure they do not play with the appliance.
- At the end of its lifetime, do not dispose of the machine as ordinary waste, but leave it with personnel who are

qualified to collect such material. In this way, it will be properly disposed of and recycled.
This is valuable aid for safeguarding our environment!

NOTE!

- The AqueenaEvo is a water filtration system designed for home use. Any use outside of the indoor home environment or for purposes other than purifying water for household use will automatically void your warranty.
- The AqueenaEvo should not be used on feed water that is microbiologically unsafe or of unknown microbiological quality without disinfecting the water before using the device.

  Cold water plumbing – AqueenaEvo must be connected to cold water pipe. If the hot water (>38°C) is used as a water source, it will cause permanent damage to the RO membrane and severely degrade the product performance.

WARNING!

- **Do not disassemble or modify AqueenaEvo on your own!**
  Never attempt to repair or alter any internal AqueenaEvo components, as this may compromise the function and safe operation of your water purifier. Any unauthorized work will automatically void the warranty. If any repair needs to be done, please contact your Zepter service technician for assistance.
- **Do not use AqueenaEvo under high water pressure conditions!**
  Operating under high-pressure conditions may result in rupture of the water purifier pipes, and consequent water leakage. Recommended inlet pressure is 15 - 60 psi.
- **Do not use AqueenaEvo in the presence of explosive, highly flammable material, gas or naked flames.**
  Do not put the water purifier near a fire source or a place where the temperature is too high (stove, oven), as it can result in housing deformation or melting.
- **AqueenaEvo is a free-standing unit.** Don't place or store anything on top of the unit.
- **Before connecting the unit to the mains, make sure the data on the data plate matches that of your electricity mains.**
- **Avoid using the appliance if any damage is visible on the power cord or the plug.**
- **Do not touch the power plug with wet hands! It may lead to electric shock.**

⚠ **CAUTION!**

- **Avoid using chemicals when cleaning the outside casing of AqueenaEvo.**

  Alcohol, petrol, organic and inorganic acids, and strong basic chemicals like concentrated dishwashing detergents will irreparably damage the plastic housing of the AqueenaEvo

- **Do not use the AqueenaEvo outdoors!**
  If AqueenaEvo is used outdoors, it can accelerate the ageing of pipes and parts, which can result in leakage or device damage.

6. Installation Guide

Before starting the installation, please read this manual thoroughly to ensure proper setup and safe operation. Pay close attention to all safety guidelines and follow each step carefully.

Installation must comply with state and local laws and regulations. Please verify and adhere to all **local plumbing codes** before proceeding.

Required Tools:
To install the **AqueenaEvo WT-600 Water Purification System**, you will need basic hand tools, including:

- **Electric drill with drill bits up to 12.5mm (0.5 inch)**
- **Adjustable wrench**
- **Tube cutters or a sharp knife**
- **Cross-head screwdriver**

Ensuring you have the right tools and follow the proper installation procedure will help guarantee optimal system performance and longevity.

Typical Installation
The illustration below provides an example of a standard under-sink installation, requiring no additional accessories.

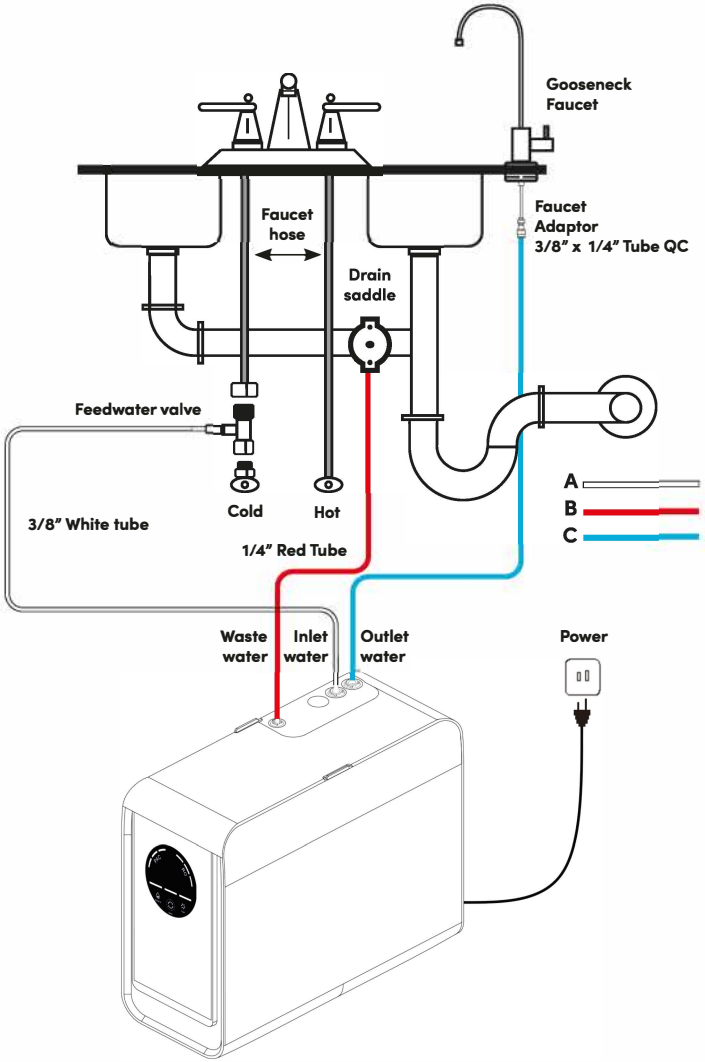

7. Getting started

AqueenaEvo WT-600 can be installed under a sink or in a remote location, such as a laundry room or utility room.

Before proceeding, carefully review the installation options below and determine the most suitable placement for your system.

Installation Options

- **Under-Sink Installation:** Ideal for placement in a kitchen or bathroom sink cabinet. Ensure there is a suitable drain point to accommodate water discharge from the Reverse Osmosis (RO) system.
- **Remote Installation:** The unit can be installed away from the RO (Reverse Osmosis) faucet, such as in a laundry or utility room. This setup requires access to a nearby water source and a drain point. Depending on the distance, additional tubing or a delivery pump may be needed.

Before installation, confirm the available space and ensure the unit fits properly. Leave adequate amount of space around the system for easy filter replacement and maintenance.

8. Installation Guide

Step 1
Install the feed water adaptor valve

Warning: Make sure you have turned the water supply off before starting any plumbing work.
If the cold water valve outlet is 3/8", it can be directly connected by following the steps.

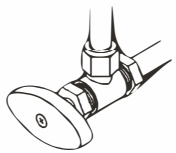

Locate
Shut off valve

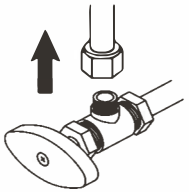

Remove the original connection from between the faucet and the cold water shut-off valve under the sink.

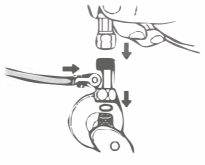

Connect the cold-water supply and feed water adapter valve.

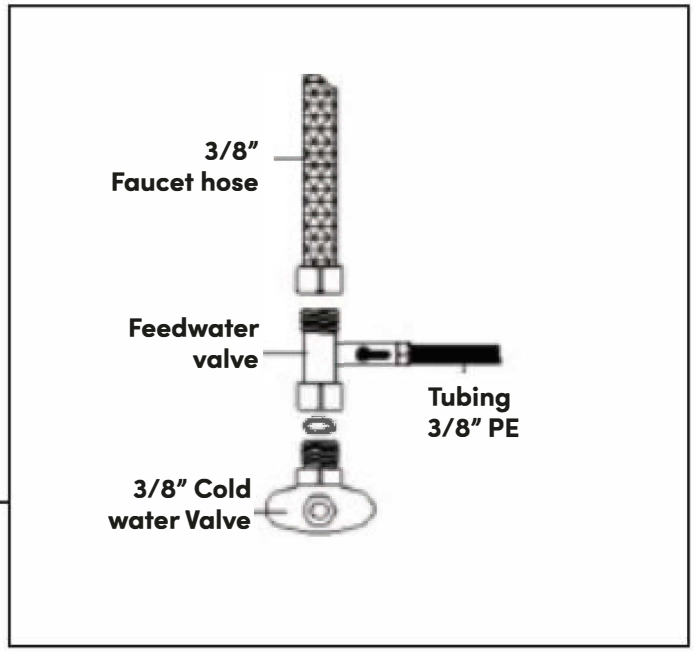

Note: Please check if the sealing ring is installed, or it may cause water leaking. If the cold water valve outlet is 1/2",it can be connected via the following two fittings.

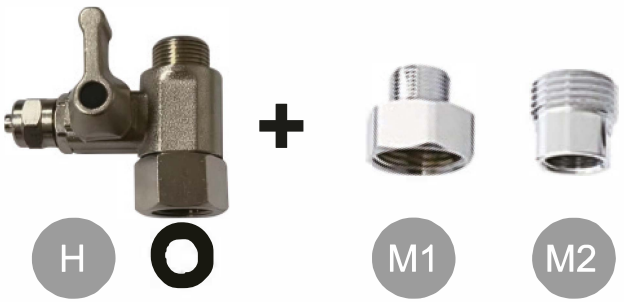

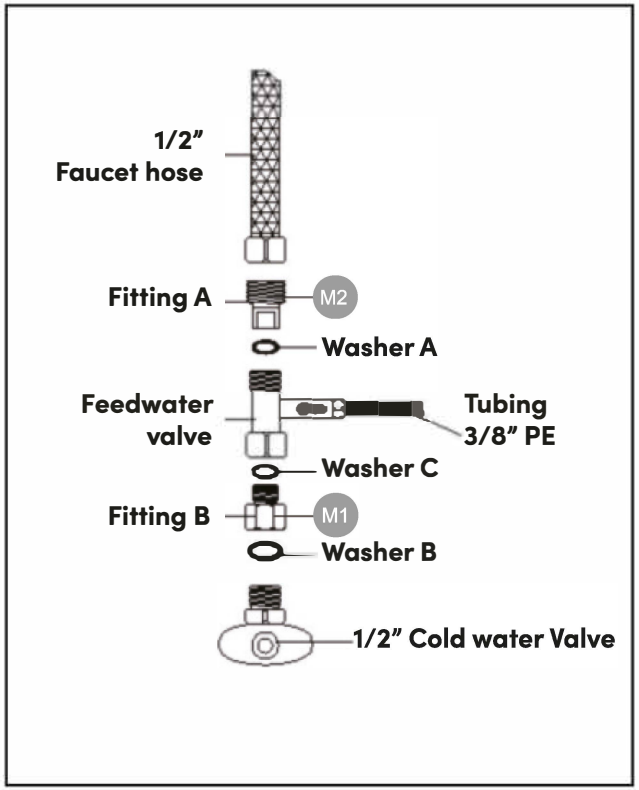

Step 2
Installing the Faucet

Warning: For optimal placement, install the faucet on the sink surround, preferably using an existing mounting hole. If a suitable hole is available, remove the cover and ensure you have clear access both above and below the sink.

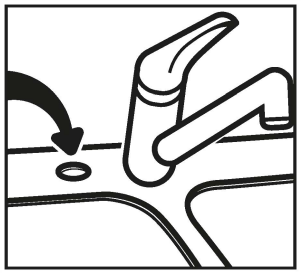

If a suitable hole is available, remove the cover and ensure you have clear access both above and below the sink.

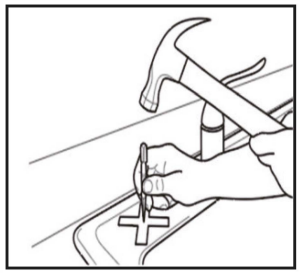

If no pre-existing holes are available, you will need to **drill a new hole**. the maximum thickness of the sink for this installation is 3 cm (1.2 inches).
For granite, tile, or concrete countertops, professional assistance may be required to prevent damage.

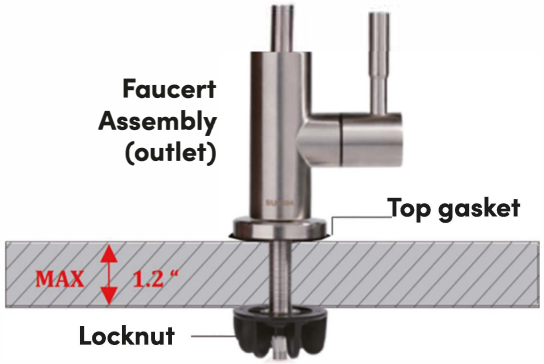

To drill the hole:

- Mark the drilling spot using a hammer and center punch.
- Start with a pilot hole, then gradually increase the drill size up to 1.2 cm (0.5 inch).
- Insert the faucet through the hole with the top gasket in place.
- Secure it firmly using the locknut.
- Ensure the faucet is stable and properly sealed to prevent leaks.

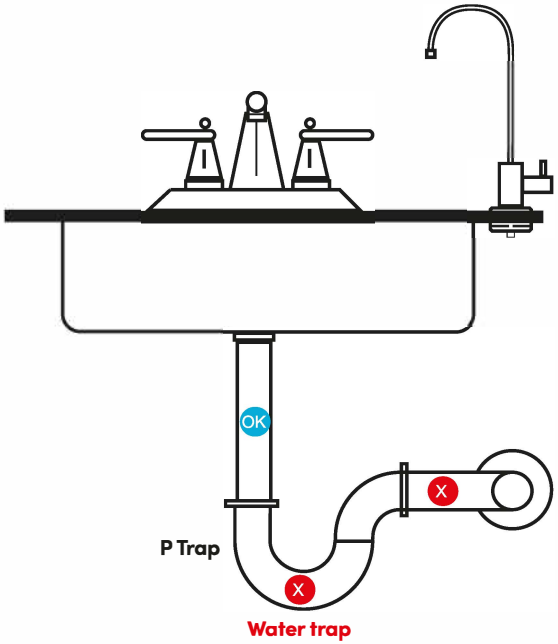

OK

INSTALLATION
Only istall saddle valve on straight pipe above ant water traps!

X

WARNING
Never mount drain saddle on bends of below the water trap!

Step 3
Installing the Drain Saddle

When installing AqueenaEvo WT-600 under a sink, ensure the drain is connected to a straight piece of pipe before the water trap (either the 'P' trap or 'U' bend), as shown in the diagram below.

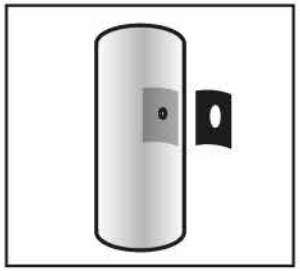

Drill 0.65 cm (0.25 inch) hole on the drain pipe with an electric drill.

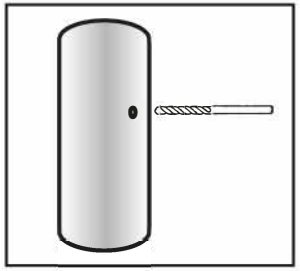

Remove the backing and stick the saddle valve seal on the pipeline through the holes.

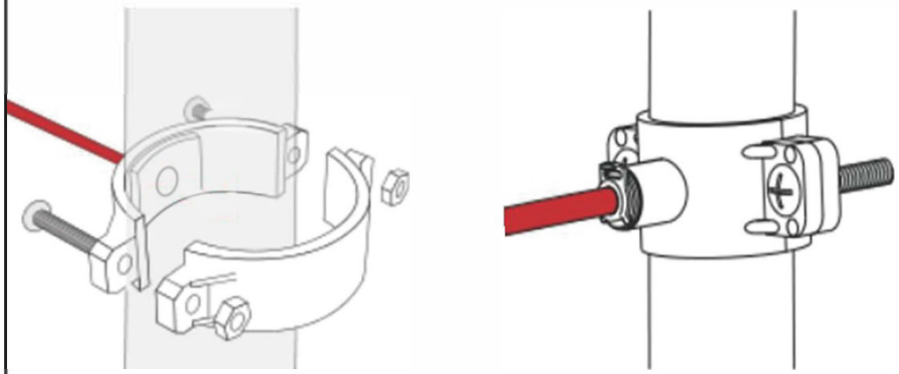

Assemble the drain saddle valve according to the provided diagram.

Tighten the bolts evenly using a cross-head screwdriver to ensure the clamp fits snugly around the pipe.

Do not overtighten.

Once secure, insert the 0.6 cm (0.25 inch) PE tube into the saddle valve's Quick Connect (QC) fitting.

Step 4
Assemble the Components

AqueenaEvo WT-600 water purification system uses quick-connect (QC) fittings, making the installation simple and easy.

Step 4.1 - How to release the tube (or plug) from a quick-connect.

Remove the locking **C-clip** by sliding it out from under the quick-connect fitting collet.

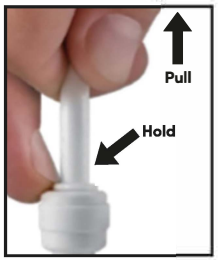

Push the collet down onto the fitting (closing the gap between the collet and fitting) and hold.

While holding the collet down, gently pull the tube (or plug) in the opposite direction at the same time to release.

Step 4.2 - How to insert the tube into a quick-connect.

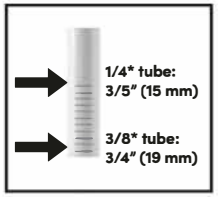

Make sure the tube has a clean square cut with no bur present.

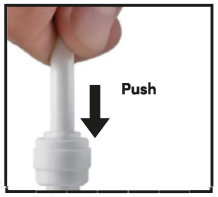

Push the tube firmly into the QC fitting, ensuring it is positioned correctly (you will feel the tube 'jump' into position as you push it into the fitting). The 1/4"tube is secure once it has raveled 1. 5 cm (0.6 inch) into the fitting.
The 3/8"tube is secure once it has traveled 1.9 cm (0.7 inch) into the fitting.

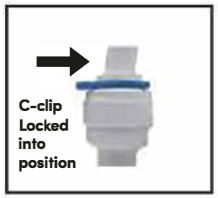

Replace the locking **C-clip** to secure the QC fitting.

To prevent water leakage, ensure that the Card Pin is installed in the correct location when connecting the tubing.

Step 5
Connect Tubing

Follow the instructiosn below to connect AqueenaEvo WT-600:

A. Inlet water.
Use 3/8" white tube to connect the Inlet water port and the Feedwater Valve. *(refer to white tube connect)*

B. Waste water.
Use 1/4"red tube to connect the waster water port and the Drain Saddle. *(refer to white tube connect)*

C. Outlet water.
Refer to blue tube connect. Use3/8" blue tube to connect the outlet water port and the Gooseneck Faucet.

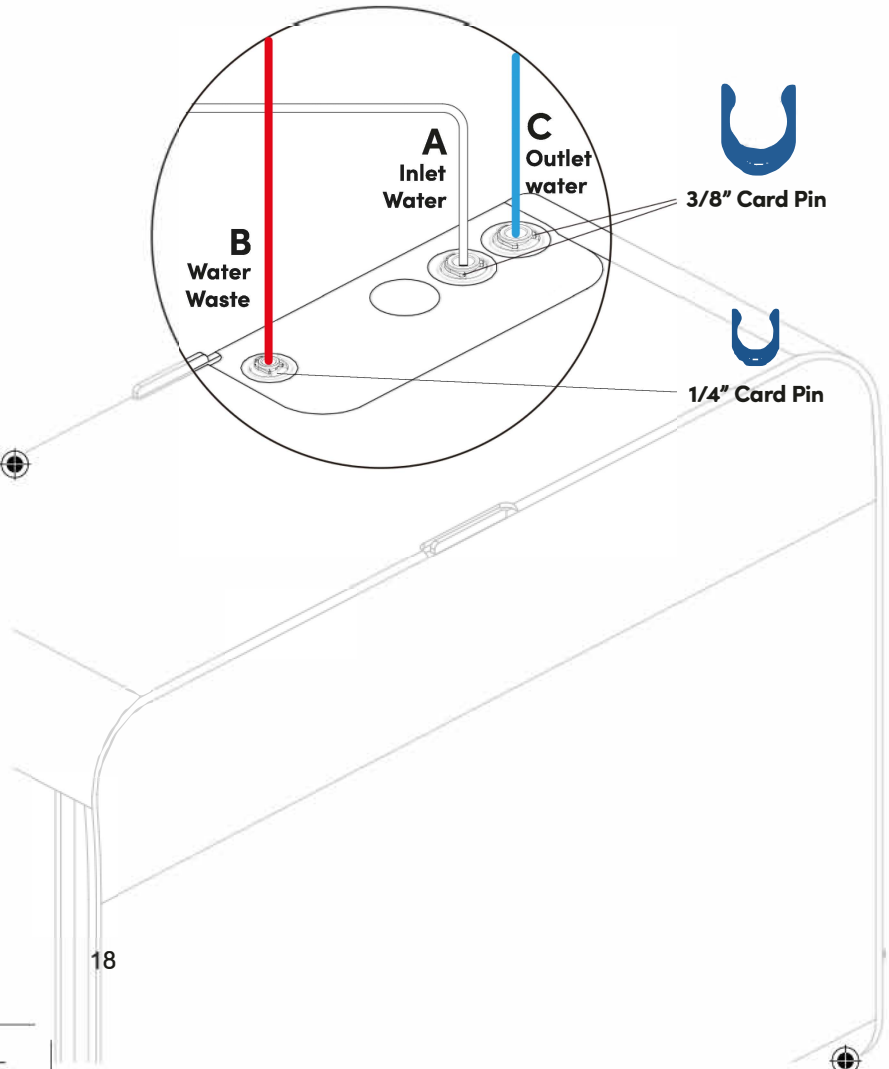
A
Inlet
Water
C
Outlet
water
B
Water
Waste
3/8" Card Pin
1/4" Card Pin

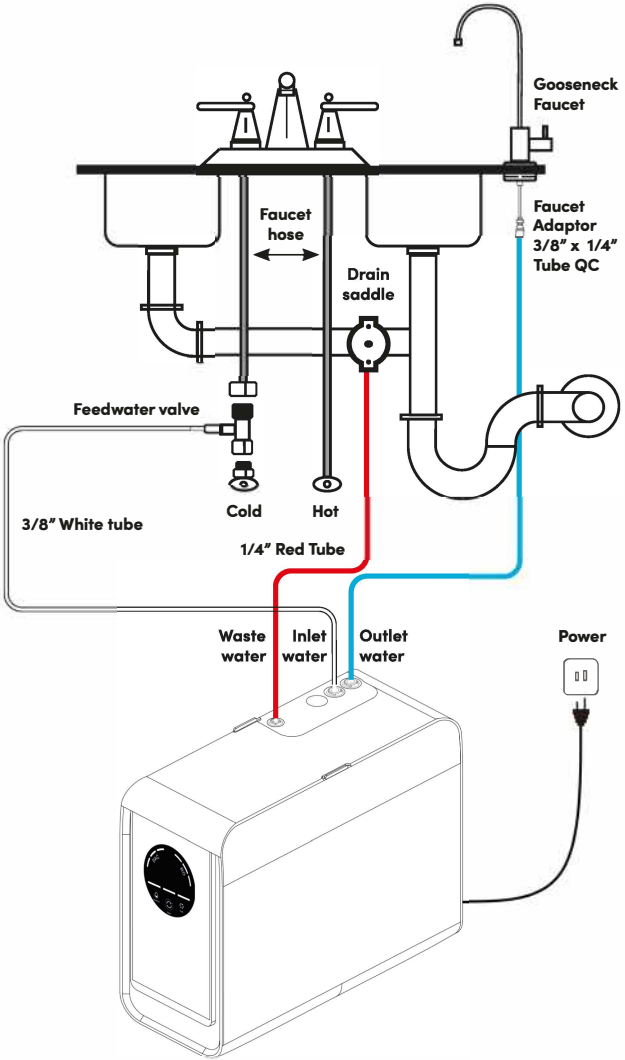
Gooseneck
Faucet
Faucet
hose
Faucet
Adaptor
3/8" x 1/4"
Tube QC
Drain
saddle
Feedwater valve
Cold
Hot
3/8" White tube
1/4" Red Tube
Waste
water
Inlet
water
Outlet
water
Power

Step 6
System Flushing (Startup and Filter Replacement)

Turn on the Feedwater valve and gooseneck faucet, then plug in the system and allow it to run for 20 minutes. This will rinse all fittings and the new filters.

Check for any signs of leaks during this time.

Warning: Ensure that the power socket under the sink is turned on and confirm that the system is correctly plugged into the power outlet.

Enjoy Your Drinking Water

After the flushing process, the system is ready for use. Simply turn on the faucet and enjoy clean, filtered water.

Note: You may hear some noise while the system is running. This is normal, and the noise will subside once the faucet is turned off.

Congratulations! You have completed the installation!

9. Maintenance and filter replacement

Control Panel

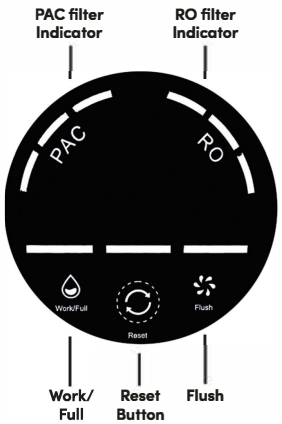

The AqueenaEvo WT-600 control panel has one push-button and two indicators to operate the system and to display the service life of filters.

Warning Indicators

- **PAC filter Indicator** - Indicates when the user needs to replace the PAC Filter.
  After plugging in the power, the indicator light remains on and will flash when the filter lifespan expires.
- **RO filter Indicator** - Indicates when the user needs to replace the RO Filter.
  After plugging in the power, the indicator light stays on and will flash when the filter lifespan expires.
- **Reset Button** - Used to reset the filter cartridge, please refer to Replacing Filter Cartridges Part of the manual for details. (After plugging in the power, the indicator light remains on)
- **Safety Protection** - All indicator lights will flash, and the system will stop filtering water. Reset the system by reconnecting the power.

Filter capacity depends on water consumption and water quality. On average, one set of filters can purify approximately 4000L of water.

Filter Cartridge Replacement Instructions

Before installing a new filter, ensure that the alignment markings on both the filter and the locking latch are properly matched.To replace the filter cartridge safely, please follow these steps:

1. **Turn off the feedwater valve** to stop the water supply.
2. **Turn on the faucet** to release any built-up water pressure inside the system.
3. **Switch off the power suppl**y to ensure a safe replacement process.

Once these steps are completed, you may proceed with installing the new filter.

Step 1

- As shown in the diagram, press the locking latches on both sidessimultaneously with both hands and pull them outward with force to pry open the clasps.
- The filter cartridge will then popout automatically.

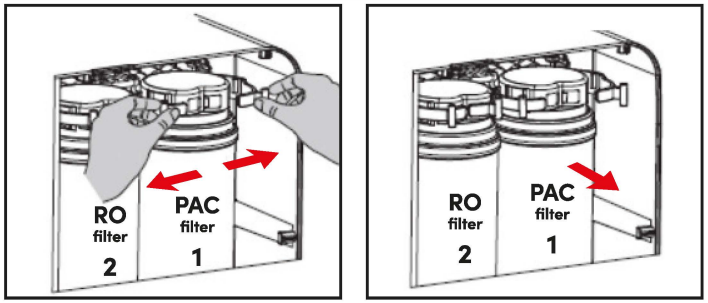

Step 2

- Remove the old Filter cartridge and discard it.
- Match the corresponding label on the new Filter cartridge (ensure it aligns with the label on the housing) and align it with the water inlet/outlet ports.
- Press the new Filter cartridge firmly into place.

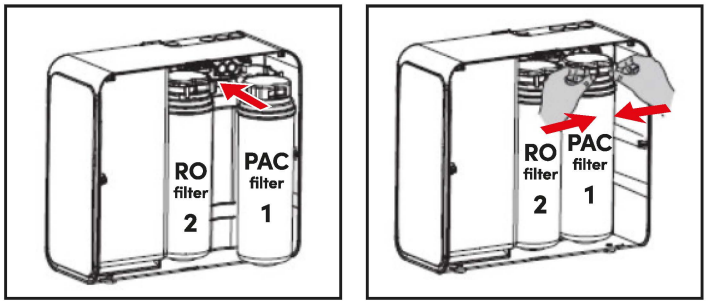

Tips:

1. Avoid using excessive force to prevent breaking the clasps.
2. Before replacing the Filter, verify that the label on the Filter cartridge matches the label on the clasp to ensure compatibility.
3. Replace the PAC Filter cartridge First, followed by the RO Filtercartridge, in this order for easier and faster installation.
4. After installation, ensure the clasps are fully seated into their slots and that the Filter cartridge is Firmly secured.

Step 3
Resetting Filter Cartridges

Please follow the following steps to reset the filter indicator light,

3.1 Hold the Reset button down for 3 seconds; you will hear 1 beep.

3.2 Select the filter cartridge you want to reset.
After 1-beep, the PAC Filter indicator light will flash. Move to step 3 to complete PAC Filter reset; if you want to reset the RO filter, please just press the Reset button once to select the RO Filter, then the "RO" indicator light will flash.

3.3 Hold the Reset button down for at least 3 seconds to complete the reset process.
You will hear 1 beep, and the selected filter indicator light will change from flashing to steady, and the system will return to regular operation. If there is no operation within 10 seconds, during each stage of the filter reset process, the System will automatically exit the setting state, and then flush the system, refer to **Step 6: System Flushing (Startup and Filter Replacement)**

Note: the above steps can only reset one selected filter cartridge at a time, and they cannot reset two filter cartridges at the same time.

Description	Recommended Replacement Cycle
PAC Filter Cartridge	6-12 months
RO Filter Cartridge	12-18 months

Note: due to the difference in feed water quality and water amount consumption, the above is an estimate only.

10. All help Topics

Q: The system does not power on after plugging it in.

A: Ensure that power is available under the sink, as this issue often occurs when the power supply is switched off. Check the connection between the power plug and the outlet to ensure it is securely plugged in. To test if the issue is with the system itself, try plugging it into a different power outlet.

Q: There is no water output from the faucet.

A1: The water supply is off – Turn on the feedwater adapter or water supply valve.

A2: Incorrect filter installation – Reinstall the filter, ensuring each cartridge is placed correctly.

A3: A tubing is crimped – Inspect all tubing and straighten any kinks.

A4: If the system continuously dispenses water for over an hour, it enters safety protection mode, causing all indicator lights to flash and the filtration to stop. Reset the system by unplugging and reconnecting the power.

A5: Incorrect inlet and outlet tube connections – Verify that the inlet water tube is properly connected to the system's inlet and the outlet tube to the system's outlet, following the manual instructions.

Q: The water flow at the faucet is low.

A1: A tubing is crimped or leaking – Check that all tubing is properly installed and secure.

A2: Low water temperature – The system operates best within a temperature range of **(5–38°C).**

A3: Low water pressure – Ensure the incoming water pressure is between **15–60 psi.**

A4: The filter cartridge is clogged – If using well water, ensure it passes through a pre-filtration system to prevent large particles from clogging the filter and reducing its lifespan.

Q: Why does black water come out during flushing?

A: This is normal. The black water is caused by residual carbon powder on the filter material. Flush the system for 5 minutes, after which the water will be safe for use.

Q: The filtered water tastes like tap water.

A1: Incorrect tubing installation – Ensure the drain tubing is not connected to the faucet.

A2: The filter is expired – Replace the **PAC filter** or **RO filter cartridge**.

Q: All indicator lights are flashing.

A1: The system has dispensed water continuously for over an hour and has entered safety protection mode. To reset, unplug and reconnect the power.

Q: Wastewater continues to flow even after turning off the faucet.

A1: The solenoid valve may be damaged. Please contact ***quality@zepter.com*** for assistance.

Q: The filtered water has an unusual taste or odor.

A1: The PAC filter has reached its adsorption capacity – Replace the **PAC filter**.

A2: Incorrect pipeline connection – Verify that all connections follow the manual instructions.

A3: The system has not been used for an extended period – Replace all filter cartridges and flush the system.

Q: The system makes significant noise during operation.

A: Poor water quality may cause premature filter blockage.
Replace the PAC and RO filters, and check the quality of the incoming water.
Note: Some noise during filtration is normal.

11. Disposal Information

In accordance with art. 13 of Legislative Decree no. 151 dated 25 July 2005, the implementation of European Directives 2002/95/EC, 2002/96/EC and 2003/108/EC on the reduced use of hazardous substances in electrical and electronic equipment, and their disposal, the barred bin symbol means that used electrical and electronic products should not be mixed with general household waste. For proper treatment, recovery and recycling, please take this product to designated collection points at the end of its useful life. Properly disposing of this product will help conserve valuable resources and prevent potential negative effects on human health and the environment, which could otherwise result from improper waste handling.

12. Warranty card and Statement

All our appliances have undergone strict inspection tests and are guaranteed against manufacturing defects. The Warranty is valid from the date of purchase, as indicated on the invoice issued by the dealer upon delivery of the appliance. The manufacturer undertakes to repair or replace, free of charge, any parts that are found to have a manufacturing defect within the Warranty period. Defects that are not clearly attributable to either the material or the manufacturing will be examined at one of our Zepter Service Centers or at our headquarters and charged according to the outcome.

The warranty is only valid if:

1. The machine is found to have material or production defects.
2. No signs of breakage by the customer or of original pieces having been fitted by an unauthorized person have been found.
3. Original accessories have been used.
4. The machine has not been overloaded or caused to crash.
5. The device has been maintained in line with the manufacturer's recommendations.
6. All filters and membranes have been changed regularly and the recommended filter replacement period has not been exceeded.

The Warranty does not apply to:

1. Components subject to wear and tear.
2. Damage caused by transport, incorrect use, negligence or faulty installation, as per the warnings set out in the product catalogue.
3. Consumables (including filters and membranes which have to be replaced periodically).

This warranty does not affect the consumer's statutory rights under applicable national legislation or their legal entitlements against the retailer as defined in the sales or purchase agreement. In the absence of applicable national legislation, this Warranty will constitute the consumer's sole and exclusive legal recourse. In this case, the manufacturer will not be liable for any accidental or consequential damage arising from the breach of any express or implied guarantee of this product. The manufacturer's liability will be limited to and will not exceed the product purchase price paid by the consumer. This Warranty does not cover damage to the product resulting from mistreatment or misuse of the product, inappropriate packaging, accidents, or maintenance and repair operations carried out by unauthorized service centers. The manufacturer reserves the right to withdraw its Warranty if the label containing the product serial number has been removed or rendered illegible after purchase.

Model	AqueenaEvo WT-600	
Serial No.:		
Lot No.:		
CUSTOMER'S DETAILS		
Name and Surname		
Address		
Phone number		
e-mail		
invoice number		
invoice date		
INSTALLATION DETAILS		
Name and Stamp of installation service provider		**Space for stamp**
Date of installation		
TDS of raw water		
e-mail		
Customer's signature		
Service technician signature		
SERVICE CONTACT		
Name		
Address		
e-mail		
Phone number		

shop.zepter.com

Instruction manual

Distributed by:
Home Art & Sales Services AG
Sihleggstrasse 23, 8832
Wollerau-Switzerland
E-mail: quality@zepter.com

EU address:
Zepter International Poland Sp. Z o.o.
ul. Domaniewska 37, 02-672
Warszawa-Poland

zepter INTERNATIONAL
LIVE BETTER • LIVE LONGER

©COPYRIGHT HOME ART & SALES SERVICES AG – ZEPTER GROUP 2025 - CODE - PMD-HC-061-25-EN